LUSTER 凌云光 | OXFORD INSTRUMENTS ANDOR

iStar CCD series

Intensified CCDs for Time-resolved Spectroscopy

Key Specifications

- ✓ < 2 ns true optical gate
- ✓ Up to 3,571 spectra/s
- ✓ Integrated triple output DDG
- ✓ Photocathode peak QE up to 50%
- ✓ Integrate-On-Chip gating up to 500 kHz
- ✓ -40°C TE cooling
- ✓ USB2 interface

Key Applications

- ✓ Plasma studies
- ✓ Time-resolved Fluorescence & Photoluminescence
- ✓ Time-resolved Raman
- ✓ Transient absorption
- ✓ LIBS
- ✓ VUV spectroscopy

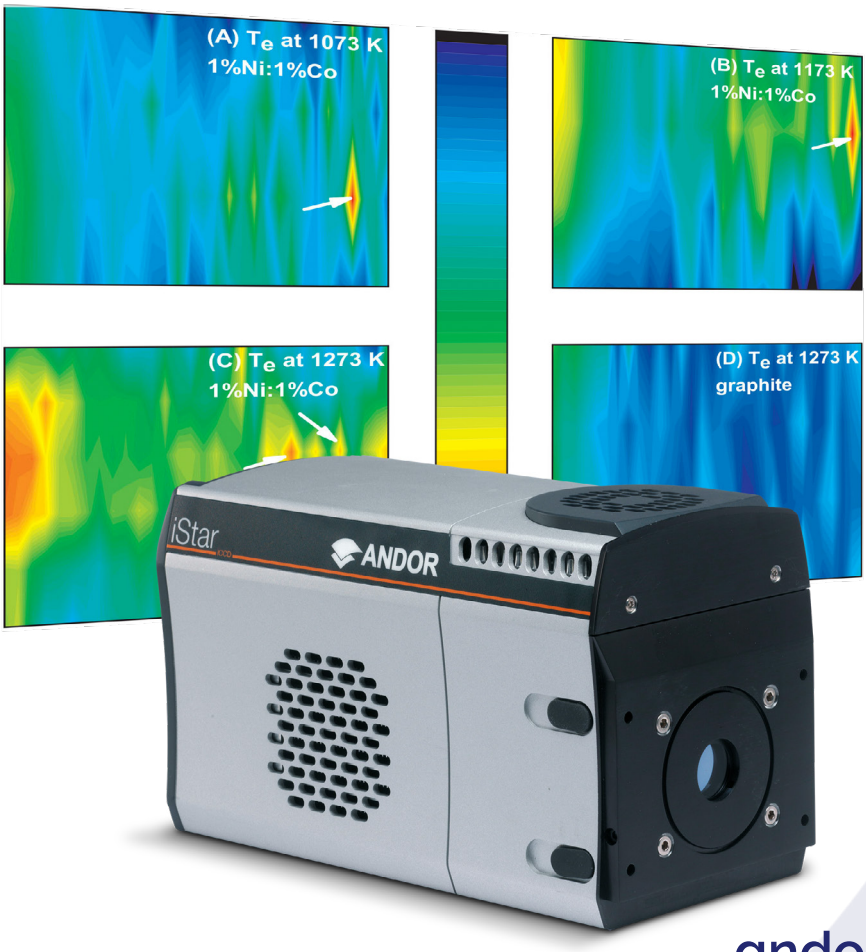

andor.oxinst.com

Introducing iStar for Spectroscopy

Andor's iStar extracts the very best from CCD sensor and image intensifier technologies

Exceptional detection performances are accessed through high quantum-efficiency image intensifiers, thermo-electric cooling to -40°C, 500 kHz photocathode gating rates and enhanced intensifier EBI noise reduction.

Low jitter, low insertion delay gating electronics and nanosecond-scale optical gating provide excellent timing accuracy down to a few 10's of picoseconds, allowing ultra-precise synchronization of complex experiments through iStar's comprehensive range of input/output triggering options.

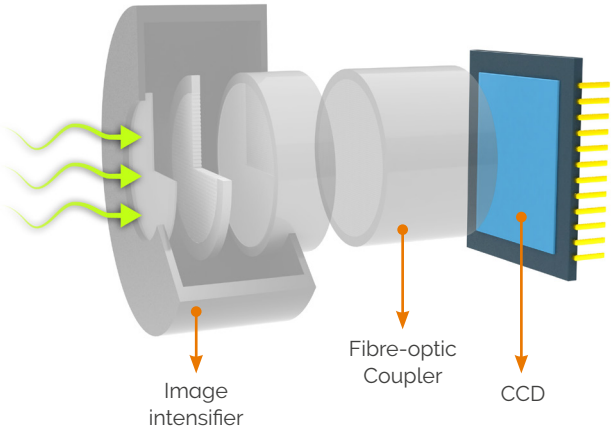

Meet the family•[1]

	iStar 320T		iStar 334T	iStar 340T	
Array format	1024 x 255 26 µm pixels		1024 x 1024 13 µm pixels	2048 x 512 13.5 µm pixels	
Active pixels	Ø 18 mm tube 690 x 255 pixels 18 x 6.6 mm	Ø 25 mm tube 960 x 255 pixels 25 x 6.6 mm	Ø 18 mm tube 1024 x 1024 pixels 13.3 x 13.3 mm	Ø 18 mm tube 1330 x 512 pixels 18 x 6.9 mm	Ø 25 mm tube 1850 x 512 pixels 25 x 6.9 mm
Effective active area (vs image intensifier Ø)	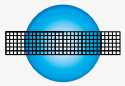	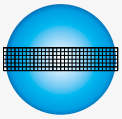		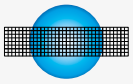	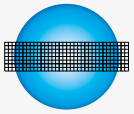
Spectral rate (max, at 16-bit digitization)	323 sps (FVB) 3,571 sps (crop mode) 26,590 sps (fast kinetic)		145 sps (FVB) 3,450 sps (crop mode) 29,850 sps (fast kinetic)	135 sps (FVB) 1,825 sps (crop mode) 16,920 sps (fast kinetic)	
Pixel well depth	500,000 e^-		100,000 e^-	100,000 e^-	
Min read noise (e^-, typical)•[2]	7		5	6	
Minimum cooling temperature	-40°C				
Image Intensifier options	**Gen 2** - Broadband, moderate VUV-NIR QE **Gen 3** – VIS-NIR, high QE **Gating** down to < 2 ns (Fast Gen 2 or Gen 3) or <100 ns (High QE Gen 2) **Phosphor** P43 (fast decay) or P46 (ultrafast decay) options				
Recommended Applications	• Rapid, broadband spectroscopy • Broadband multi-track spectroscopy		• High resolution, narrowband spectroscopy • Extended fast kinetic series and multi-track	• High resolution, broadband spectroscopy • High resolution, broadband multi-track spectroscopy	

NEW The iStar sCMOS is Andor's new ultrafast platform for ns time-resolved imaging & spectroscopy.

It features high frame rates up to 40 fps (4,000 with ROI) through a USB3 interface, with the high accuracy gating performance that you would expect from an iStar.

It is the ideal platform for ultrafast, ns time-resolved imaging.

Features & Benefits

Feature	Benefit
High-resolution sensors and image intensifiers	Sharpest images and spectrum definition, 100% fill factor for maximum signal collection efficiency.
True optical gating < 2 ns	Billionth of a second time-resolution for accurate transient phenomena study.
5 MHz readout platform	Rapid frame and spectral rates for superior characterization of dynamic phenomena. Single readout amplifier for best image digitization uniformity.
Superfast readout options Crop & Fast Kinetic mode	Fully customizable binning sequences for highest spectral and image rates. Greater than 3,571 spectra/s continuous rates, up to 48,780 spectra/s in burst mode.
High QE Gen 2 & 3 image intensifiers	Superior photon capture, with peak QE up to 50% and spectral coverage from 120 to 1,100 nm.
Low jitter, on-board Digital Delay Generator (DDG™)	Highest gating timing accuracy with lowest propagation delay. Software controlled 3x triggering outputs with 10 ps setup accuracy for complex experiment integration.
500 kHz sustained photocathode gating	Maximizes signal-to-noise ratio in high repetition rate laser-based applications.
TE-cooling to -40°C	Efficient minimization of CCD dark current and pixel blemishes.
Photocathode EBI minimization	Dry gas purge interface for further efficient EBI reduction.
Intelligate™	Intelligent and accurate MCP gating for better than 1:10^8 shuttering efficiency in the UV.
Insertion delay as low as 19 ns	Minimum delay between experiment signal generation and actual image intensifier triggering.
USB 2.0 interface	Industry-standard plug-and-play, seamless multi-camera control from single PC or laptop.
Real-time control interface	On-the-fly software control of intensifier gain, gating and 3x outputs trigger parameters for real-time detection optimization.
2 year warranty	Reliability and guaranteed performance over time.

Deep TE-cooling to -40°C – lowest sensor dark current

- ✓ Experiments involving multi-kHz lasers and extremely weak sample emission, where multiple photocathode gatings can be set within a single CCD exposure. This exposure is typically set to a few seconds to allow for hundreds of thousands of accumulations to occur. During these extended CCD exposures, sensor deep cooling is of the greatest importance.
- ✓ Photon counting, where any noise contribution from any element of the ICCD has to be minimized to allow access to the lowest detection threshold. As Image Intensifiers are fibre coupled to the CCD, the photocathode will see some degree of conductive cooling, which will contribute to minimize the EBI. Further thermal noise reduction can be achieved through the iStar's dry gas purge interface.

Driving the absolute best spectral aquisition rates•[1]

	320T	334T	340T
Sensor array size	1024 x 255	1024 x 1024	2048 x 512
Pixel size	26 x 26 µm	13 x 13 µm	13.5 x 13.5 µm
Max. readout speed	5 MHz	5 MHz	3 MHz
Spectral rates (FVB)	323 sps	145 sps	135 sps
Crop mode rates (spectral, binned) [number of rows equivalent to a 130 µm high channel]	3,571 sps [5 rows]	3,450 sps [10 rows]	1,825 sps [10 rows]
Fast Kinetics rates vs. channel heights			
26 µm	37,990 Hz [1 row]	48,780 Hz [2 rows]	30,030 Hz [2 rows]
50 µm	26,590 Hz [2 rows]	29,850 Hz [4 rows]	16,920 Hz [4 rows]
100 µm	16,615 Hz [4 rows]	16, 805 Hz [8 rows]	10,225 Hz [8 rows]
200 µm	9,495 Hz [8 rows]	9,525 Hz [15 rows]	4,975 Hz [15 rows]
Frame rates (full frame)	15.9 fps	4.2 fps	2.5 fps

Crop mode: Pushing frame and spectral rates further...

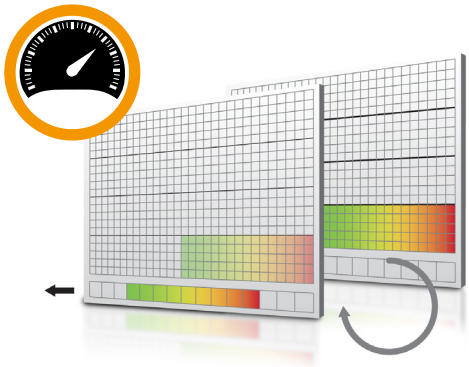

The active imaging area of the sensor is defined in a way that only a small section of the entire chip is used for imaging or spectral acquisition.

The remaining area has to be optically masked to prevent light leakage and charge spill-over that would compromise the signal from the imaging area.

By cropping the sensor, one achieves faster frame and spectral rates because the temporal resolution will be dictated only by the time it requires to read out the small section of the sensor.

... and beyond with fast kinetic mode

T1 - CCD "Keep Clean" sequence is interrupted, and useful signal builds-up on the user-defined top portion of a sensor

T2 - At the end of the exposure time, signal is rapidly shifted down by a pre-defined number of rows, and a second exposure takes place

T3 - This process is repeated until the number of acquisitions equals the series length set by user

T4 - The sequence moves into the readout phase by shifting in turn the individual acquisitions to the readout register, which is then read out

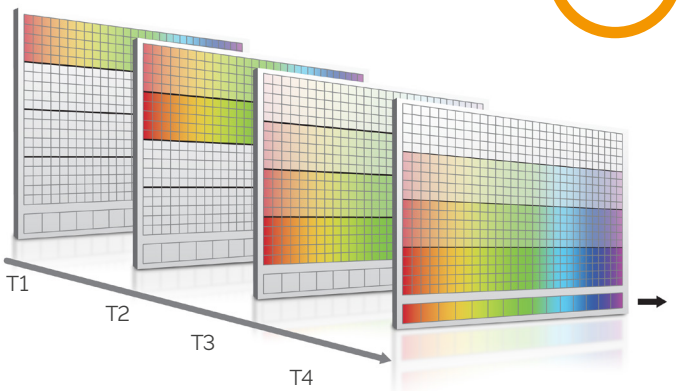

Advanced camera specifications•[1]

	DH320T		DH334T	DH340T	
Array format	1024 x 255 26 µm pixels		1024 x 1024 13 µm pixels	2048 x 512 13.5 µm pixels	
Fibre optic taper magnification	1:1				
Read noise / e^-, typ. (max) 50 kHz 1 MHz 3 MHz 5 MHz	7 (9) 12 (13) 19 (20) 25 (32)		5 (7) 8 (12) 14 (18) 20 (50)	6 (8) 9 (12) 12 (18) Focusing mode only	
Register well depth	550,000 e^-		150,000 e^-	150,000 e^-	
Minimum cooling temperature [dark current, e^-/pix/s] Air cooled Coolant chiller @ 10°C, 0.75 l/min	Ø18 mm -30°C [0.4] -40°C [0.1]	Ø25 mm -25°C [0.8] -35°C [0.2]	Ø18 mm -30°C [0.15] -40°C [0.04]	Ø18 mm -30°C [0.15] -40°C [0.04]	Ø25 mm -25°C [0.3] -35°C [0.08]
Vertical shift speeds	5.7 to 22.5 µs		6.5 to 12.9 µs	6.5 to 27.5 µs	
Sensitivity	2 to 10 e^-/count		1 to 5 e^-/count	1 to 5 e^-/count	
Sensor linearity •[3]	Better than 99%				
Digitization	16-bit				

Camera and Internal Digital Delay Generator (DDG) Inputs/Outputs

Gate pulse delay & width	Adjustable from 0 ns to 10 s in 10 ps steps
Trigger Outputs	
Output A, B and C	+5 V CMOS level with 50 Ω source impedance; can drive 5V into a non-terminating load or 2.5V into 50 Ω load; output synchronized triggers for auxiliary equipment, e.g. lasers, flash lamps, National Instrument™ hardware Individual delays control from 0 ns to 10 s in 10 ps steps Configurable Polarity
Fire	5 V CMOS level reference signal for beginning and end of individual sensor exposure
Arm monitor	5 V CMOS level reference signal to indicate when system is ready to accept external triggers. Signal goes high when system is ready to accept external triggers (after a readout has finished or sooner if in overlap mode) and goes low when the exposure is finished
Gate & output A, B and C jitter	35 ps rms (relative to external trigger or to each other)
Trigger Inputs	
External trigger	Trigger input for sensor and Digital Delay Generator Up to 500 kHz for Integrate-On-Chip mode
Direct gate	TTL input for exact external control of photocathode width and timing with smallest insertion delay.
Additional Controls	
Gate monitoring	AC coupling from photocathode to monitor exact photocathode on/off switching and timings
Insertion delay	< 19 ns in direct gate operation

Specifications: Gen 2 Image Intensifiers•[1]

Photocathode model	18*-03 (P43) 18*-04 (P46)	18*-05 ǂ	18H-13 (P43) 18H-14 (P46)	18H-83 (P43) 18H-84 (P46)	18*-E3 (P43)•[4] 18*-E4 (P46)•[4]	25*-03 (P43) 25*-04 (P46)
Useful aperture	Ø18 mm (Ø25 mm available- contact Andor for information)		Ø18 mm only			Ø25 mm
Input window	Quartz	MgF_2	Quartz	Quartz	Quartz	Quartz
Photocathode type	W-AGT	W-AGT	WR	UW	WE-AGT	W-AGT
Minimum guaranteed QE at room temperature •[5]	13.5%	11%	7%	20%	15%	14%
Typical peak QE at room temperature•[5]	>18%	>15%	>13.5%	>25%	>22%	>16%
Wavelength range (nm)	180 - 850	120 - 850	180 - 920	180 - 850	180 - 850	180 - 850
Phosphor type [decay time to 10%] Standard Optional**	P43 [2 ms] P46 [200 ns]					
Image intensifier resolution limit •[6] P43 (Standard) P46 (Optional)	25 µm 30 µm [-04 model]	25 µm 30 µm	25 µm 30 µm [-14 model]	25 µm 30 µm [-84 model]	25 µm 30 µm [-E4 model]	35 µm 40 µm [-04 model]
Minimum optical gate width (ns) •[7, 8] U (Ultrafast) F (Fast) H (High QE)	 < 2 < 5 -	 < 5 < 10 -	 - - < 50	 - - < 100	 < 2 < 5 -	 < 3 < 7 -
Maximum relative gain •[9]	> 1000 (P43) > 500 (P46)	> 1000	>850 (P43) >400 (P46)	>500 (P43) >250 (P46)	>300 (P43) >150 (P46)	>1000 (P43) >500 (P46)
Maximum photocathode repetition rate (with Intelligate™ OFF)	500 kHz (continuous)					
Maximum photocathode repetition rate n(with Intelligate™ ON)	5 kHz (continuous)					
Equivalent Background Illuminance (EBI)	< 0.2 photoe⁻/pix/sec		< 0.4 photoe⁻/pix/sec	< 0.2 photoe⁻/pix/sec		

* Substitute with appropriate gate width option, e.g. 18*-03 (please refer to page 9 for detailed ordering information)

** All photocathode types can be combined with a fast-decay P46 phosphor – please contact your local Andor representative for further information

ǂ Available with VUV-compatible spectrograph interface

Quantum Efficiency Curves for Gen 2 Image Intensifiers•[5]

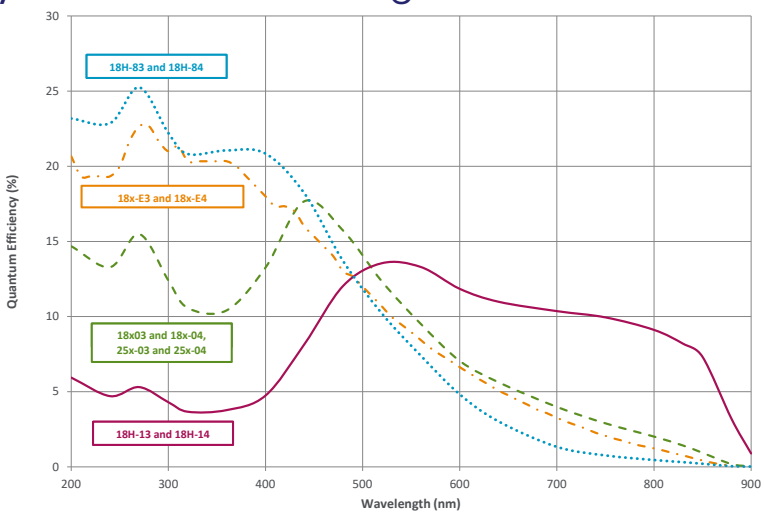

Specifications: Gen 3 Image Intensifiers•1

Photocathode model	18*-63 (P43) 18*-64 (P46)	18*-73 (P43) 18*-74 (P46)	18*-93 (P43) 18*-94 (P46)	18*-A3 (P43) 18*-A4 (P46)
Useful aperture	Ø 18 mm (Ø 25 mm also available except -93 model contact Andor for information)			
Input window	Glass	Glass	Glass	Glass
Photocathode type	HVS	VIH	NIR	EVS
Minimum guaranteed QE at room temperature •5	38%	23%	0.1%	35%
Typical peak QE at room temperature •5	> 50%	> 30%	> 5%	> 40%
Wavelength range	280 - 760 nm	280 - 910 nm	380 - 1090 nm	280 - 810 nm
Phosphor type [decay time to 10%] Standard Optional**	P43 [2 ms] P46 [200 ns]			
Image intensifier resolution limit •6 P43 (Standard) P46 (Optional)	30 µm 35 µm [-64 model]	30 µm 35 µm [-74 model]	30 µm 35 µm [-94 model]	30 µm 35 µm [-A4 model]
Minimum optical gate width (ns) •8 U (Ultrafast) F (Fast)	< 2 < 5	< 2 < 5	< 3 < 5	< 2 < 5
Maximum relative gain •9	> 200			
Maximum photocathode repetition rate (with Intelligate™ OFF)	500 kHz (continuous)			
Maximum photocathode repetition rate (with Intelligate™ ON)	5 kHz (continuous)			
Equivalent Background Illuminance (EBI)	< 0.1 photoe⁻/pix/sec	< 0.3 photoe⁻/pix/sec	< 2 photoe⁻/pix/sec	< 0.2 photoe⁻/pix/sec

* Substitute with appropriate gate width option, e.g. 18U-63 (please refer to page 9 for detailed ordering information)
** All photocathode types can be combined with a fast-decay P46 phosphor – please contact your local Andor representative for further information.

Quantum Efficiency Curves for Gen 3 Image Intensifiers•5,10

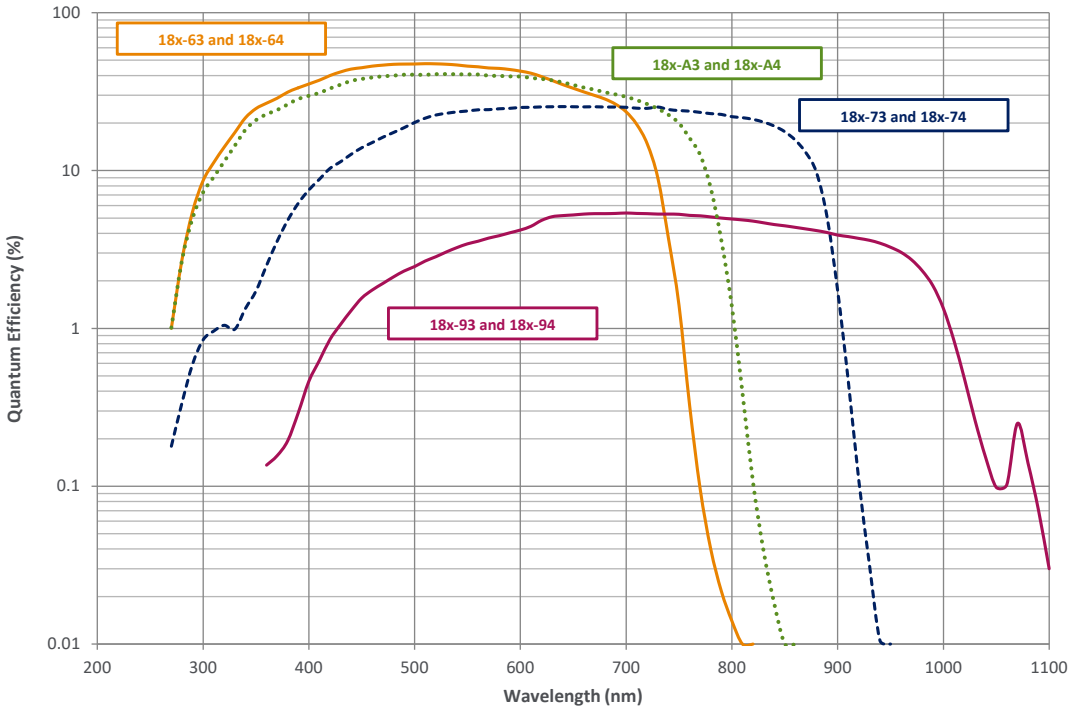

Intelligent gating modes

Integrate-On-Chip: 500,000 times more signal per 1 sec CCD exposure

The iStar's Integrate-On-Chip (IOC) mode enables accumulation of useful signal from laser-induced phenomena at frequencies up to 500 kHz, providing greatly improved signal-to-noise, and minimising experiment time. The latter greatly benefits setups where photobleaching-sensitive biological samples are probed. This translates into the possibility to accumulate 500,000 times more signal per 1 second CCD exposure time.

Integrate-On-Chip is fully software-configurable and can be used through extensive kinetic series involving up to 1,000 pre-programmed incremental delays from laser trigger for unrivalled combination of sensitivity and ultra-precise transient phenomena analysis.

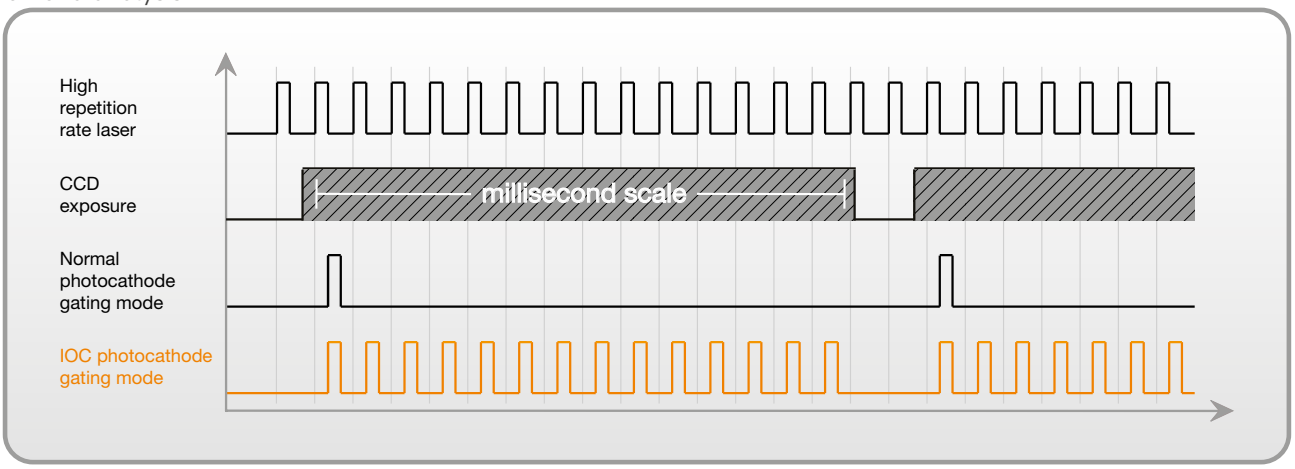

Intelligate™: Superior gating in the UV-VUV region

One of the key functions of an image intensifier is to provide high optical shuttering (ON/OFF) ratio.

By switching photocathode voltage to a higher or lower level relative to the MCP voltage, photo-electrons can be either directed towards or repelled from the MCP to avoid detection. ON/OFF values of 1:10^8 are typically measured for Visible/NIR incident light on the photocathode.

However photocathode "leakage" becomes more pronounced in the UV-VUV region (< 300 nm), where more energetic photons have a greater probability to go through the photocathode turned "OFF", reach the MCP to generate an electron that can be detected. This can lead to shuttering efficiency as low as 1:10^4.

Andor's exclusive Intelligate™ simultaneously gates the photocathode and the MCP. The ultra fast rising edge of the MCP gate pulse switches on the correct potential in a nanosecond timeframe, coinciding precisely with the photocathode gating pulse. This enables ON/OFF ratios as high as 10^8 in the UV-VUV region.

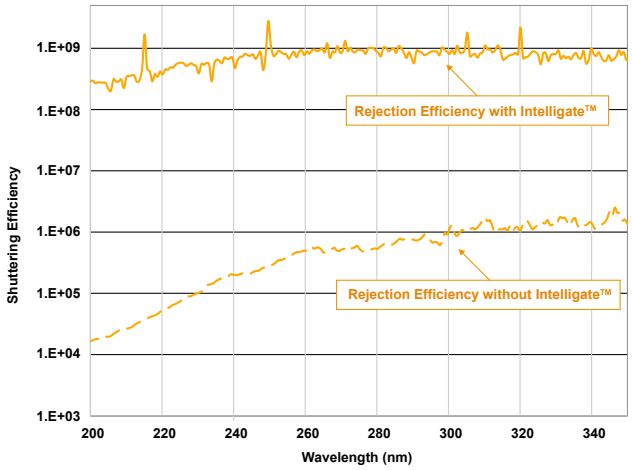

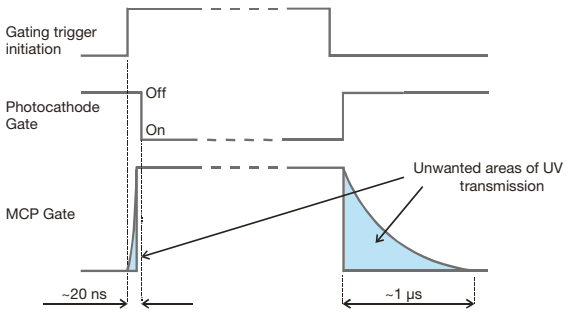

Creating the optimum product for you

DH 340 T- 18 - F - 03

example shown

Step 1. Choose the CCD matrix size

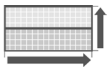

CCD Matrix

CCD matrix	Code
1024 x 256 CCD matrix, 26 µm pixel	320
1024 x 1024 CCD matrix, 13 µm pixel	334
2048 x 512 CCD matrix, 13.5 µm pixel	340

Step 2. Choose the intensifier diameter

Intensifier Diameter

Intensifier diameter	Code
Ø 18 mm	18
Ø 25 mm (DH320 and DH340)	25

Step 3. Choose a minimum gating speed

Gating Speed

Gating Speed	Code
High QE, slow gating	H
Fast Gating	F
Ultra Fast Gating	U

Step 4. Select an image intensifier option

Intensifier

Gen 2 Intensifier option	P43 phosphor	P46 phosphor
W-AGT photocathode	03	04
W-AGT photocathode, MgF_2	05	-
WR photocathode	13	14
UW photocathode	83	84
WE-AGT photocathode	E3	E4

Gen 3 Intensifier option	P43 phosphor	P46 phosphor
HVS photocathode	63	64
VIH photocathode	73	74
NIR photocathode	93	94
EVS photocathode	A3	A4
WE-AGT	E3	E4

Step 5. Select the required accessories and adapters

Accessories & Adapters

Description	Order Code
C-mount lens adaptor	ACC-LM-C
F-mount lens adaptor	ACC-LM-NIKON-F
Oasis 160 Ultra compact chiller unit (tubing to be ordered separately)	ACC-XW-CHIL-160
6 mm tubing options for ACC-XW-CHIL-160 (2x2.5 m or 2x5 m lengths)	ACC-6MM-TUBING-2X2.5/ ACC-6MM-TUBING-2X5M
I²C to BNC cable for Kymera and Shamrock shutter control	ELC-05323
Metric Bracket, converts ¼-20 mounting points to M6	ACC-ISTAR-METRIC ADP

Step 6. Select the required software

Software

The iStar ICCD requires at least one of the following software options:
Solis for Time-Resolved A 32-bit and fully 64-bit enabled application for Windows (8, 8.1 and 10) offering rich functionality for data acquisition and processing. AndorBasic provides macro language control of data acquisition, processing, display and export.
Andor SDK2 A software development kit that allows you to control the Andor range of cameras from your own application. Available as 32/64-bit libraries for Windows (8, 8.1 and 10) and Linux. Compatible with C/C++, LabView and Matlab.

Product drawings

Third-angle projection

Dimensions in mm [inches]
Weight: 4.2 kg [9 lb 4 oz]

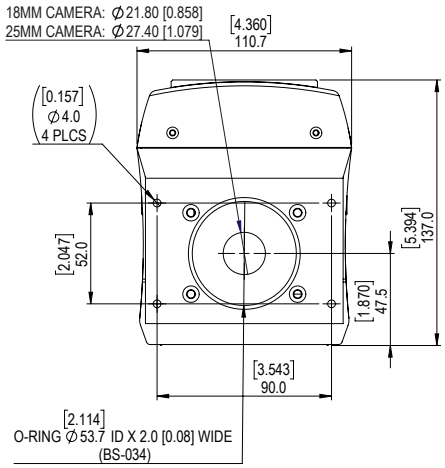

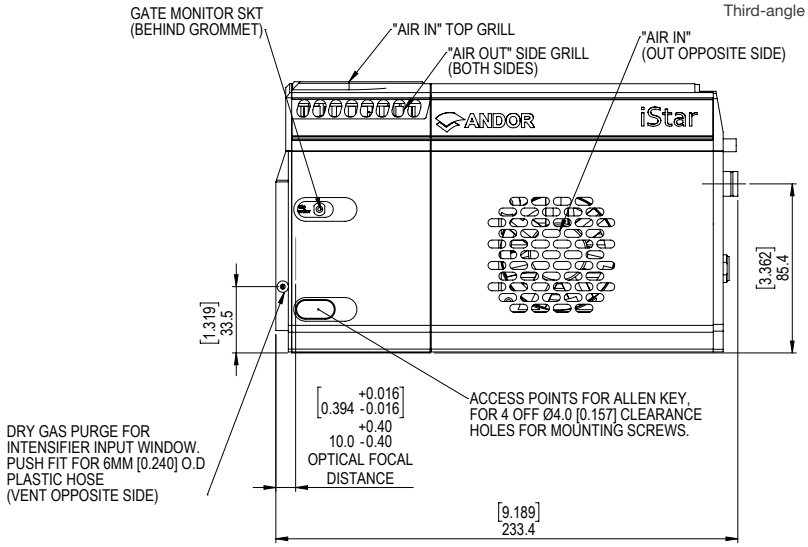

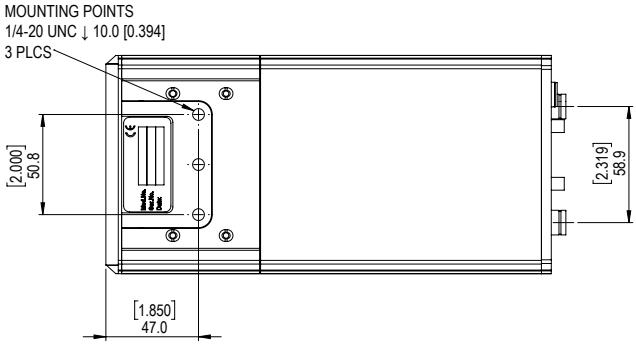

Connecting to the iStar

Camera Control
Connector type: USB 2.0

Logic Input / Output
Connector type: SMA, provided with SMA - BNC cable
5x outputs: FIRE pulse, Output A, B, C from DDG™ and ARM
2x inputs: Camera trigger from 3rd party source & direct gate for complete, direct external control of intensifier gating
I²C connector
Compatible with Fischer SC102A054-130, pin-outs as follow:
1 = Shutter (5V CMOS level with 50 Ω impedance), 2 = I²C Clock (5V), 3 = I²C Data (5V), 4 = +5 Vdc, 5 = Ground

Gate Monitor
1x output: AC coupling to photocathode

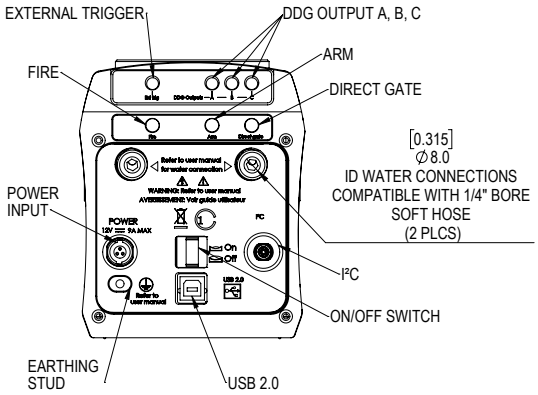

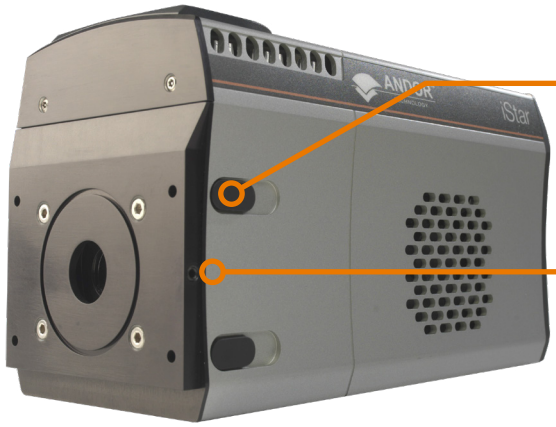

Gate monitor

AC coupling to photocathode provides the most reliable timing information on actual gating occurrence

Dry gas purge

Minimizes Electron Background Illumination (EBI) thermally generated at the photocathode to improve detection threshold

Our Cameras for Spectroscopy

Spectroscopy-based diagnostics in the fields of Material Science, Chemistry, Life Science or Fundamental Physics & Optics rely on the capture and analysis of optical and chemical signatures with a high degree of precision.

Andor's range of detectors offer a wide range of sensitivity, time-resolution and sensor formats to best suit specific experimental conditions from UV to SWIR, nanosecond to hours time resolution, high photon flux to single photon with super dynamic range and resolution.

High Sensitivity & Dynamic Range

- ✓ Long exposure
- ✓ High sensitivity UV-SWIR
- ✓ Large pixel well depths
- ✓ High resolution matrix

iDus CCD & InGaAs | Newton CCD & EM

Spectrographs & Accessories

- ✓ High modularity
- ✓ High resolution
- ✓ Intelligent motorisation
- ✓ Broadband & high resolution Echelle

Shamrock | Kymera | Mechelle

kHz Spectral Rates

- ✓ µs to ms time-resolution
- ✓ High sensitivity down to single photon
- ✓ High resolution matrix

Newton CCD & EMCCD | iXon EMCCD | Zyla sCMOS | Marana sCMOS

Extended Multi-fibre Spectroscopy

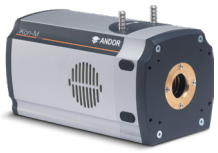

- ✓ Large area sensors
- ✓ Ultrafast sCMOS and EMCCD options
- ✓ High sensitivity down to single photon

iKon-M CCD | iXon EMCCD | Zyla sCMOS | Marana sCMOS | iStar CCD & sCMOS

Learn more about our detector range here.

Order Today

Need more information? At Andor we are committed to finding the correct solution for you. With a dedicated team of technical advisors, we are able to offer you one-to-one guidance and technical support on all Andor products. For a full listing of our local sales offices, please see: andor.com/contact

Our regional headquarters are:

地址：北京市海淀区翠湖南环路13号院7号楼知识理性大厦

电话：400 829 1996

传真：010-52349666

邮箱：marketing@lusterinc.com

Items shipped with your camera

1x 12V, 120W single line Power Supply Unit
2x 2m BNC to SMA cable
1x Gate Monitor cable
1x 3 m USB cable A to B type, shielded
1x User guides in electronic format
1x Individual system performance booklet

Regulatory Compliance

Compliant with the requirements of the EU EMC and LV Directives through testing to EN 61326-1 and EN 61010-1.
External power supply PSE-approved

Minimum Computer Requirements:

- 3.0 GHz single core or 2.4 GHz multi core processor
- 2 GB RAM
- 100 MB free hard disc to install software (at least 1 GB recommended for data spooling)
- USB 2.0 High Speed Host Controller capable of sustained rate of 40 MB/s
- Windows (8, 8.1 and 10) or Linux

Operating & Storage Conditions

- Operating Temperature: 0°C to 40°C ambient
- Relative Humidity: < 70% (non-condensing)
- Storage Temperature: -20°C to 55°C

Power Requirements

- Power: +12 VDC ± 5% @ 5 A typ. / 9 A max.
- Ripple: 120 mV peak-peak 0 - 20 MHz
- 100 - 240 VAC, 43 - 67 Hz External power supply

Power Consumption:

- Camera + External Power Supply (Typ./ Max.): 69 W/124 W. Camera Only (Typ./ Max.): 60 W/108 W

Footnotes:

1. Figures are typical unless otherwise stated.
2. Measured for the entire system. Combination of CCD readout noise and A/D noise - measurement is for single pixel readout with -30°C CCD cooling and at minimum exposure time under dark conditions. Values quoted are measured with highest available PAG setting.
3. Linearity is measured from a plot of counts vs exposure time under constant photon flux up to the saturation point of the system.
4. The On/Off ratio of the 'E3' image intensifier in the UV with MCP gating is typically 10^5.
5. Typical photocathode Quantum Efficiency and input window transmission as measured by the tube manufacturer.
6. Typical resolution of the image intensifier tube only, not the overall resolution of the system. As a rough guide, the smallest resolvable FWHM feature will be approximately 2x the CCD pixel size. This is a very important consideration for optical resolution calculations in spectrograph-based systems.
7. Gen 2 High QE (H) option – Photocathode QE is inherently linked to the gating speed of the intensifier. High QE option (H) offers higher peak QE than Ultrafast (U) or Fast (F) intensifiers, while exhibiting minimum gating speed one order of magnitude slower.
8. Actual measured minimum optical gating of the photocathode, reflecting not only the electrical pulse width applied to the photocathode but also its inherent irising time.
9. Gain is software-selectable through a 12-bit DAC and varies exponentially with DAC setting. Value refers to the ratio of max to min intensifier gain as measured for individual cameras. Actual optical gain (counts/photoe$^-$) for a DAC setting is accessed by the multiplication of the relative gain (at that DAC value) by the minimum system gain (at DAC = 0, CCD e$^-$ /photoe$^-$) and divided by the sensitivity (CCD e$^-$/count) at a given CCD PAG. Sensitivities are individually measured and reported for each system.
10. Specifications are subject to change without notice

Windows is a registered trademark of Microsoft Corporation.
Labview is a registered trademark of National Instruments.
Matlab is a registered trademark of The MathWorks Inc.

LISTARISS 0321 R1